Satchwell™

SFW, SFA

WATER AND AIR FLOW SWITCHES

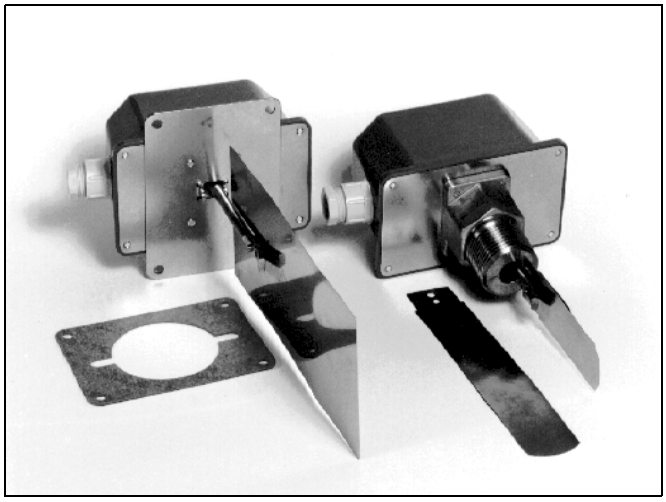

The Satchwell water flow switch is designed to monitor water flow in pipe diameters from 1" up to a maximum of 6" and is factory set at a minimum value (see table). The switching value can be increased as required.

The water flow switch can be mounted in a short necked welding socket or in a tee with a short branch. It is not possible to use a swept tee as this will interfere with paddle movement.

The air flow switch has a paddle that can be trimmed if the air flow is above 5m/s.

Both the water and air flow switches are SPDT types.

t.a.c Satchwell

SPECIFICATION

Types: **SFW1251 –** Water flow switch 1" to 6" pipe diameter
SFA1451 – Air flow switch

Factory Flow Setting: SFW: Set at minimum (see table), depends on the pipe diameter.
SFA : Set at minimum 1m/s, 2.5m/s if the paddle is trimmed

Differential: See table below:

SFW SWITCHING VALUES

Pipe Diameter in Inches	Minimum Cut-in Value m^3/Hour	Minimum Cut-out Value m^3/Hour	Maximum Cut-in Value m^3/Hour	Maximum Cut-out Value m^3/Hour
1	1.0	0.6	2.1	2.0
1.25	1.3	0.8	3.0	2.8
1.5	1.7	1.1	4.0	3.7
2	3.1	2.2	6.1	5.7
2.5	4.0	2.7	7.0	6.5
3	6.2	4.3	11.4	10.7
4	14.7	11.4	29.0	27.7
5	28.4	22.9	55.6	53.3
6	43.1	35.9	85.1	81.7

SFW SWITCHING VALUES

Paddle	Minimum Cut-in Value m/s	Minimum Cut-out Value m/s	Maximum Cut-in Value m/s	Maximum Cut-out Value m/s
Untrimmed <5 m/s	2.0	1.0	9.2	8.0
Trimmed >5 m/s	3.5	2.5	10.7	9.5

Maximum Differential Pressure: SFW :11 mbar

Contact: Single Pole Double Throw (SPDT)

Contact Rating: 15A resistive, 8A inductive @ 24 to 250Vac

Ambient Temperature Limits: –20 to +85°C
Maximum fluid or air temperature +85°C

CONSTRUCTION

Cable Entry: PG 11 cable gland

Head Protection Class: IP 65

Cover: Impact resistant plastic

Casing: Galvanised steel

Lever: Brass

Paddle: Stainless Steel

WARNING -
ISOLATE ALL WIRING BEFORE REMOVING THE COVER AS MAINS VOLTAGES ARE PRESENT AT THE TERMINALS.

INSTALLATION

SFW - WATER FLOW SWITCH

1. Select a point in the pipe that has no elbows, bends or other obstructions that may cause turbulence. The pipe must be straight for at least 5 pipe diameters up and downstream of the flow switch.
2. The flow switch should be mounted in a horizontal pipe. Do not mount the flow switch directly under the pipe. If the flow switch is mounted in a vertical section of pipe the set value will differ from the settings as the water will have to move the weight of the paddle as well as the switch tension.
3. If the pipe diameter is 1, 2 or 3" then remove any unwanted paddles. If the pipe is 1.25", 1.5", 2.5", 4", 5" or 6" in diameter then use the template below to trim the 6 paddle supplied and fit it to the SFW, keep the existing paddles on the SFW as this will help to stiffen the new longer paddle.

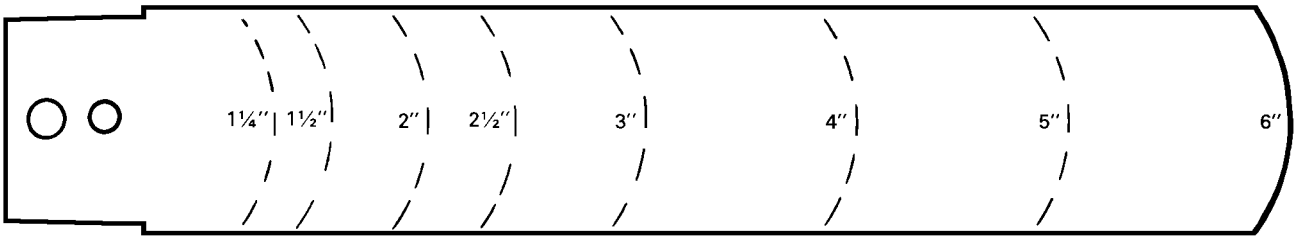

4. Fit the flow switch in to the pipe using a short neck welding socket or a tee with a short branch. It is not possible to use a swept tee or a long branch tee.
5. Check that the paddle does not touch the pipe or any other obstruction.
6. Ensure the flow direction arrow is correct for the water flow.
7. Flush out the system thoroughly.
8. Use the minimum quantity of jointing materials.
9. Remove the cover and wire the switch according to Fig.1. **THE EARTH TERMINAL MUST BE CONNECTED**.
10. Do not adjust the set value below the minimum setting as shipped from the factory.
11. Replace the cover.

SFA - AIR FLOW SWITCH

1. Select a point in the duct that has no bends or other obstructions that may cause turbulence. The duct must be straight for at least 5 duct diameters up and downstream of the flow switch.
2. The flow switch should be mounted in a horizontal duct. Do not mount the flow switch directly under the duct. If the flow switch is mounted in a vertical section of duct the set value will differ from the settings as the air will have to move the weight of the paddle as well as the switch tension.
3. If the flow rate is to be above 5m/s then the paddle should be trimmed as marked. This will increase the effective switching values by 1.5m/s.
4. Cut a slot in the duct to accept the paddle. Use the gasket supplied to seal the duct.
5. Check that the paddle does not touch the duct or any other obstruction.
6. Ensure the flow direction arrow is correct for the air flow.
7. Remove the cover and wire the switch according to Fig.1. **THE EARTH TERMINAL MUST BE CONNECTED.**
8. Do not adjust the set value below the minimum setting as shipped from the factory.
9. Replace the cover.

BASIC CONNECTIONS

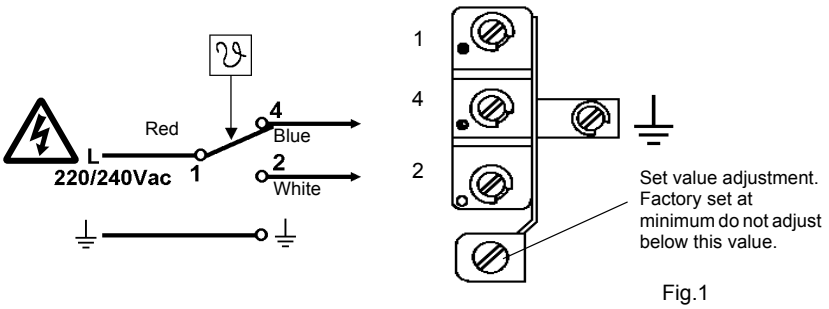

Fig.1

DIMENSION DRAWINGS

SFW

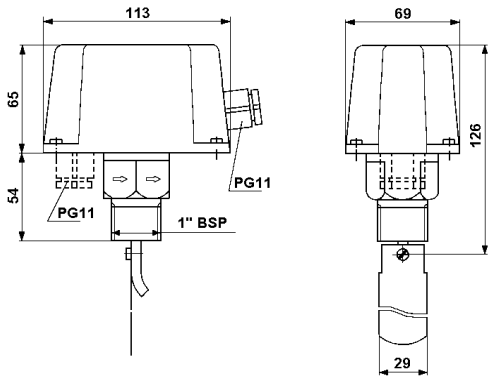

SFA

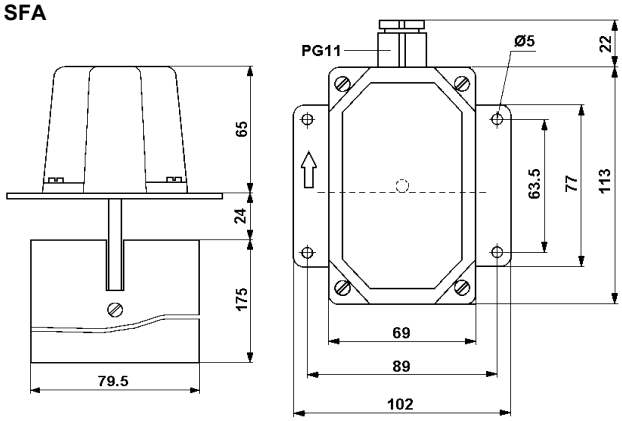

Dimensions in mm

Weights:
SFW 760g
SFA 410g

PADDLES

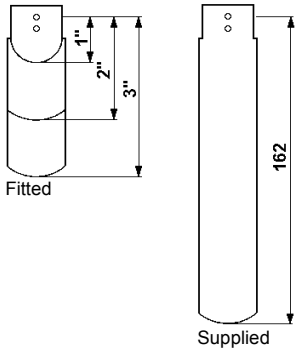

WARNINGS -

THESE FLOW SWITCHES ARE MAINS OPERATED DEVICES. LOCAL WIRING REGULATIONS AND USUAL SAFETY PRECAUTIONS MUST BE OBSERVED. NOTE EARTHING REQUIREMENTS.

ISOLATE ALL WIRING BEFORE REMOVING THE COVER AS MAINS VOLTAGES ARE PRESENT AT THE TERMINALS.

Cautions

- **Do not apply any voltages until a qualified technician has checked the system and the commissioning procedures have been completed.**
- **If any equipment covers have to be removed during the installation of this equipment, ensure that they are refitted after installation to comply with UL and CE safety requirements.**
- **Do not exceed the maximum ambient temperature.**
- **Interference with parts under sealed covers invalidates the guarantee.**
- **Design and performance of TAC Satchwell equipment is subject to improvement and therefore liable to alteration without notice.**
- **Information is given for guidance only and TAC Satchwell does not accept responsibility for the selection and installation of its products unless information has been given by the Company in writing relating to a specific application.**
- **A periodic system and tuning check of the control system is recommended. Please contact your local sales office for details.**

DS 21.670 12/05

TAC Headquarters
Malmö, Sweden
+46 40 38 68 50

Satchwell Helpline
+44 (0) 1753 611000
satchwell.info@uk.tac.com

a company of Schneider Electric

www.tac.com

t.a.c Satchwell